Nordpeis

FP-DAV0P-200 Davos P Low

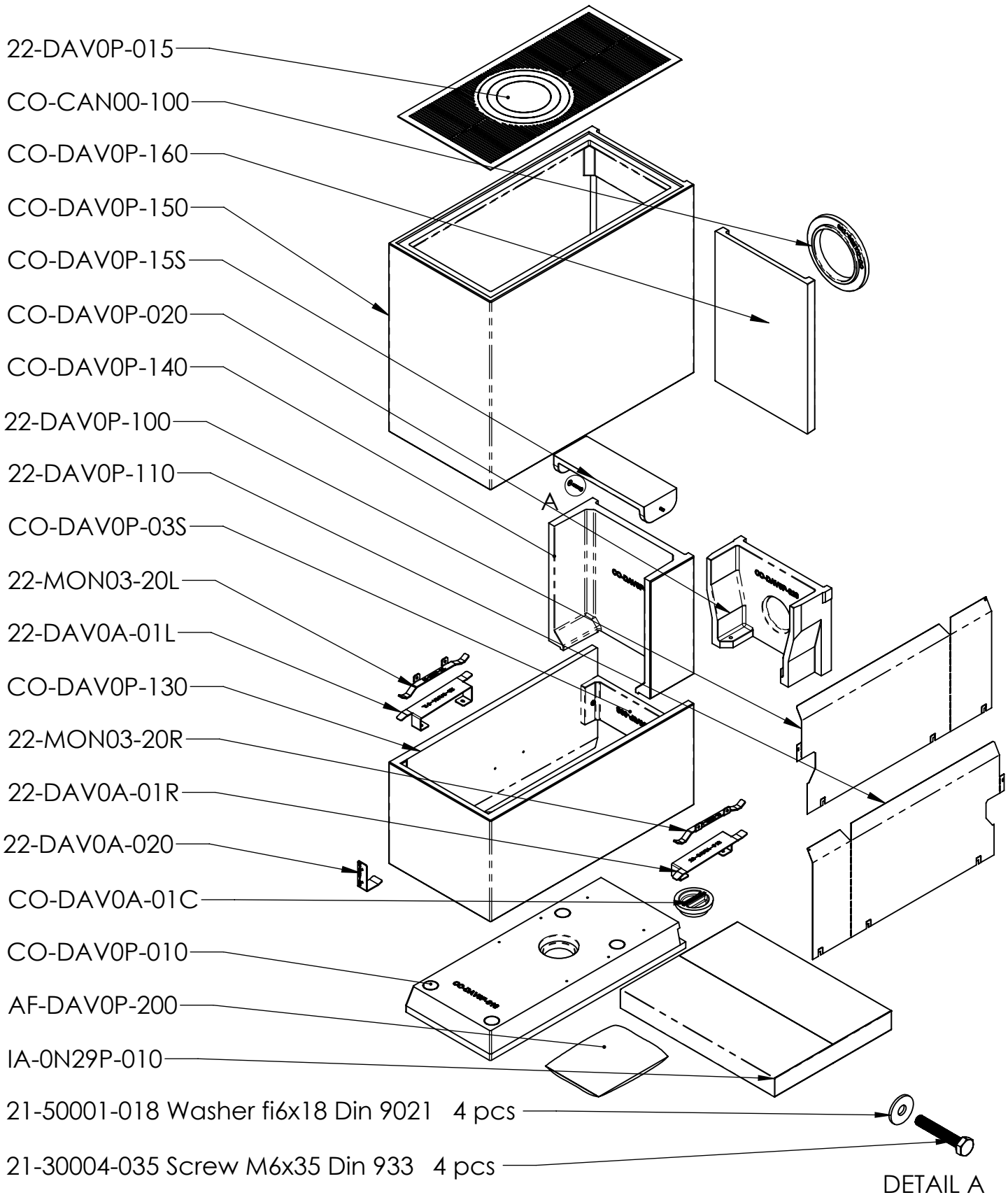

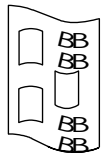

Instruction
24-DAV0P-200

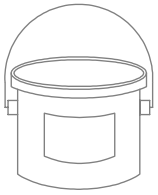

AF-00035-001

Acryl
23-00080-000

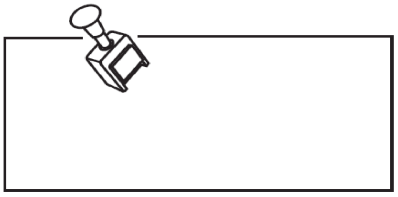

VERSION: **Q0**