Nordpeis
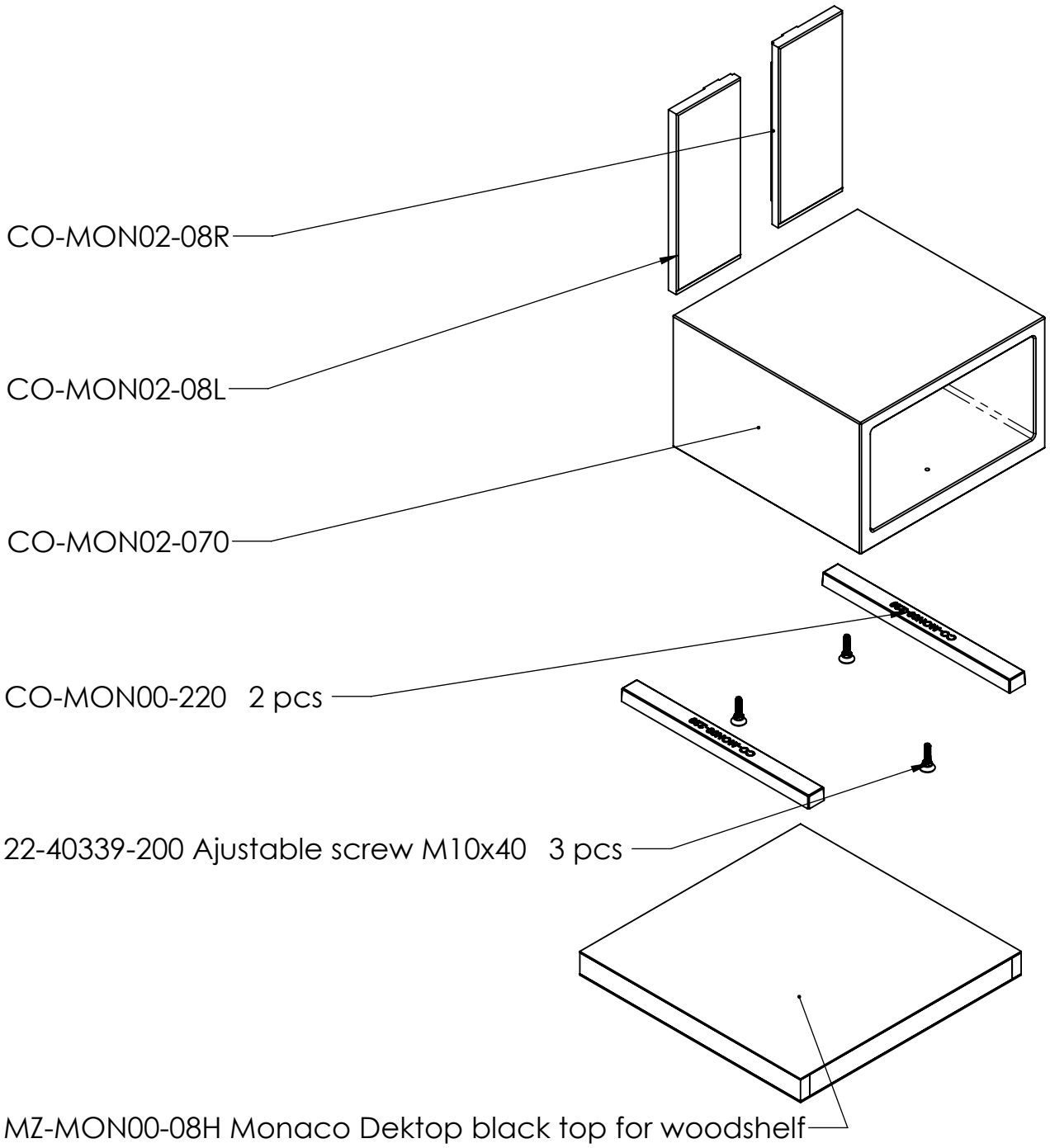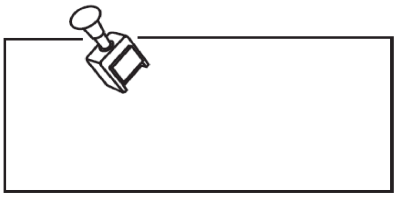
## FP-MON02-500 Monaco II woodshelf low